COPRECI

_Gas Cooking > Gas Valves

CAM 20900 round tube series

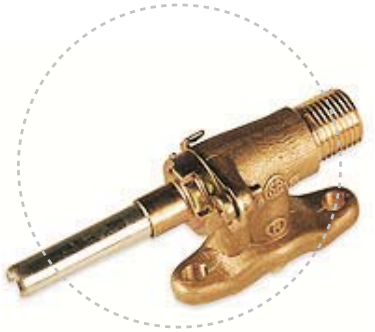

_Rotation diagrams

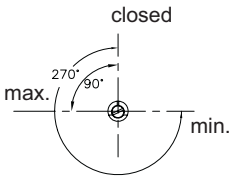

_ Construction characteristics

Mechanical body: drop-forged brass.
Male cone: bar-cut brass.
Cover: drop-forged steel.
Spindle:drop-forged steel.

_ Other characteristics

Max. ambient temperature: up to 150 ºC
Max. gas pressure: 65 mbar
Stroke: 2,5 mm
Flow: 250 l/h (1mbar pressure drop).

_Functional characteristics

Max. tightness at test pressure 150 mbar: ⩽ 8 cm3/h
Max. turning torque of the spindle: 0.2 N m

_Connection characteristics

Inlet types: round 16 mm diameter ramp. On request and after a study, other types and dimensions.
Outlet types: according to customer specifications.
Spindle dimensions: according to customer specifications.
Distance between clamp holes: 21 mm. Other types and dimensions on request.

_Installation characteristics

Max. torque for screwing: 3 N m (2 screws) and 2 N m (1 screw).
Max. torque of fitting outlet: 8 N m(biconical), 15 N m (flaring).
Range for tightening torque of injectors: 1.5 - 2.5 N m

_Main outside dimensions

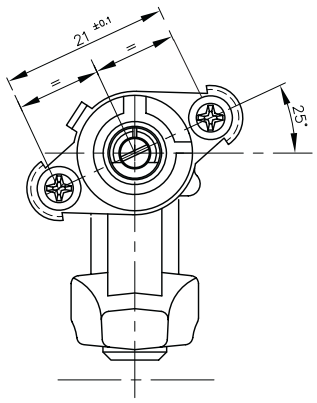

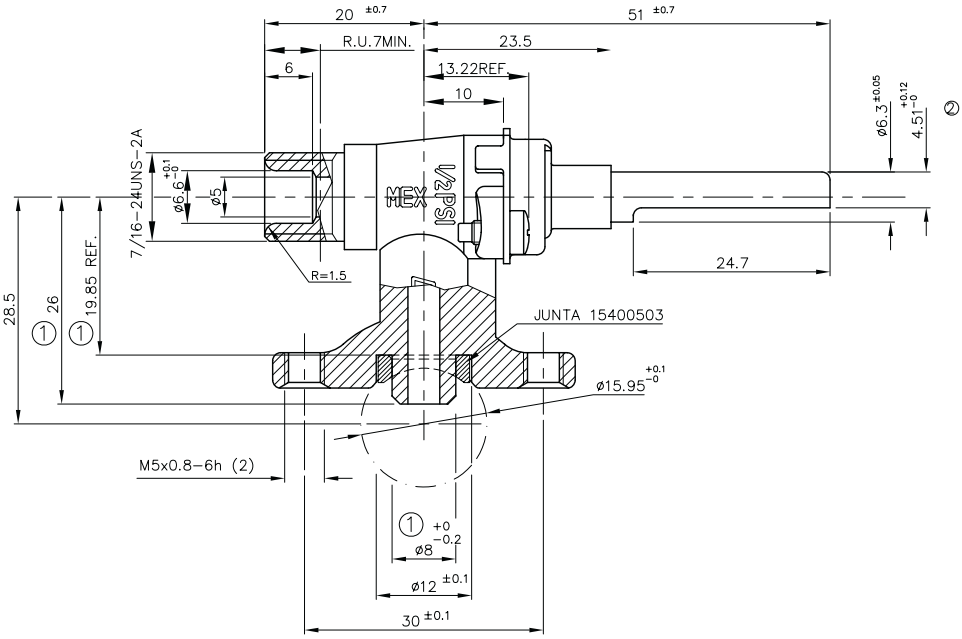

* Other versions available upon request.

MONDRAGON COMPONENTES

Copreci, S. Coop.
Araba Ibilbidea, 3
20550 Aretxabaleta (Spain)
home@copreci.es\\ **www.copreci.com**